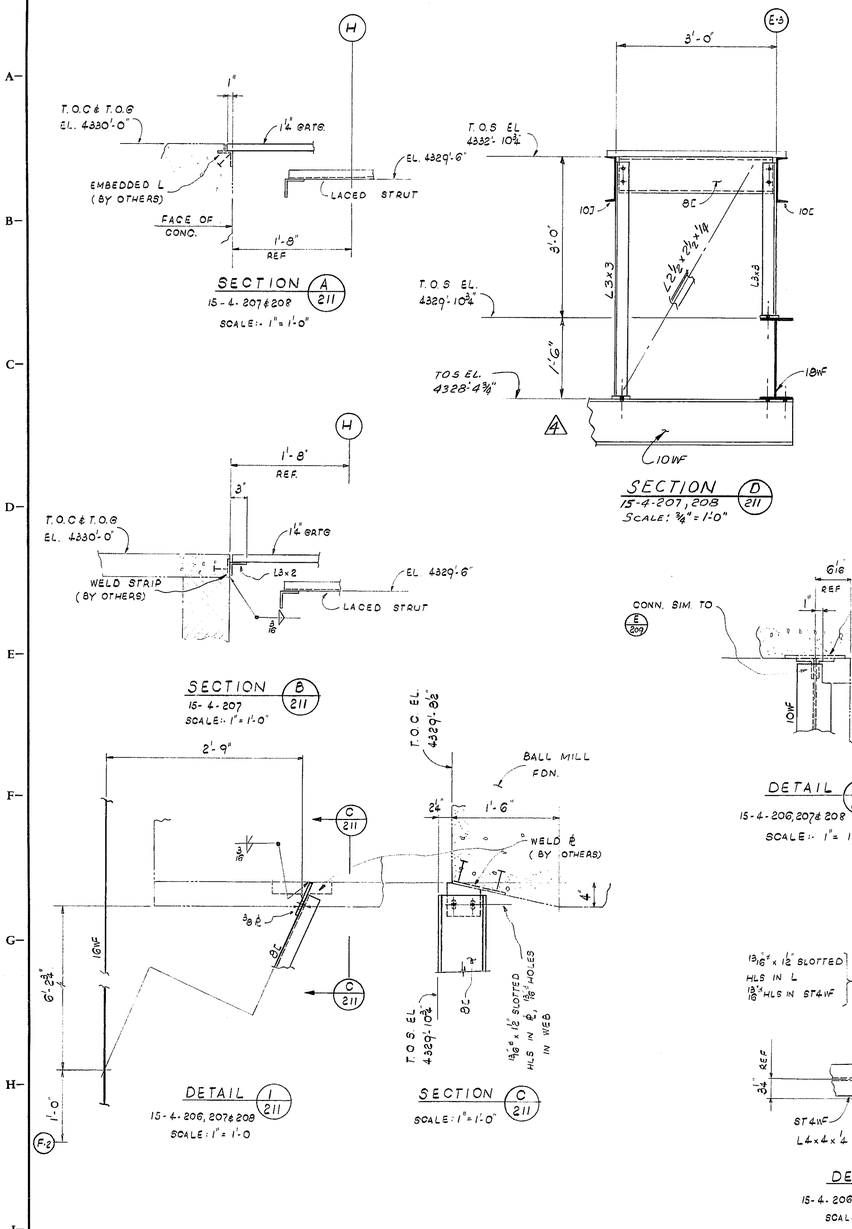

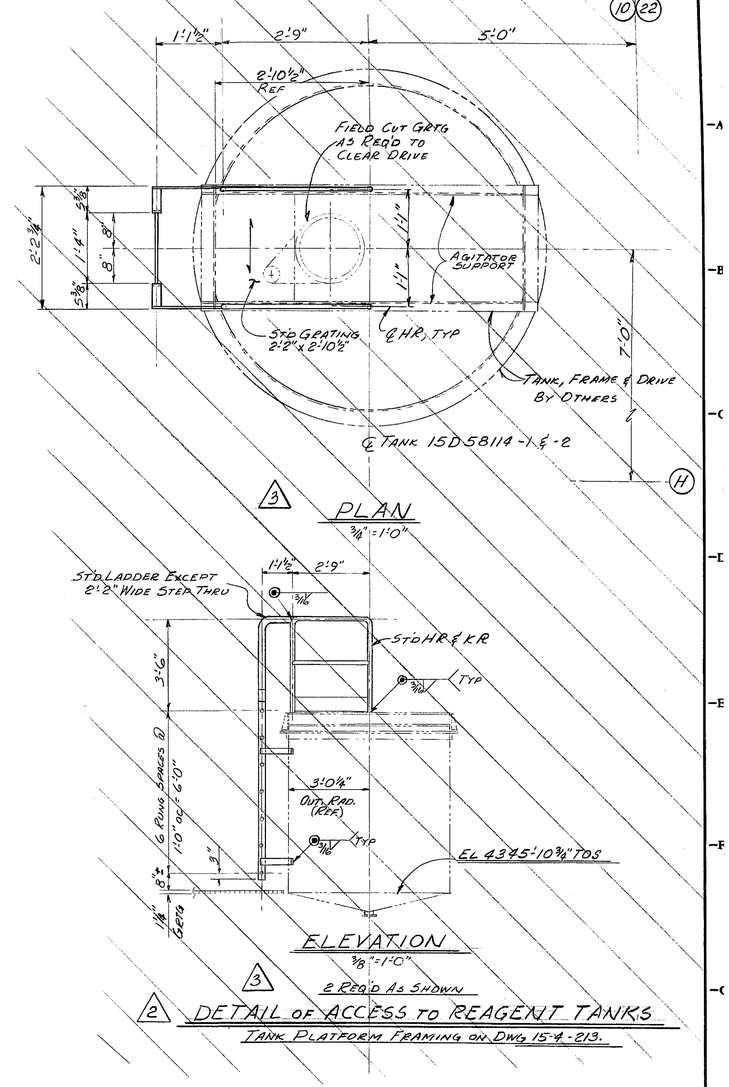

NOTES

1. FOR GENERAL STRUCT. STEEL NOTES & STD. DETAILS SEE: DWGS 10-4-01 & 02.

ACC'T. NO. 15-C-03000

METCALF DIVISION CONCENTRATOR

APPROVED BY J. H. DAVIS JR.
DATE 2-21-73
FOR PHELPS DODGE CORPORATION

NO.	REVISIONS	DATE	BY	CH'D	APP'D	NO.	REFERENCE DRAWINGS
0	SUBMITTED TO P.D. FOR APPROVAL	1-30-73	PJB	LNR			
1	DWG. ISSUED A.F.C. PER P.D. LETTER DATED 2-21-73	2-28-73	KC	LNR			
2	ADD TANK ACCESS DETAILS, ISSUED A.F.C.	6-11-73	LAM	LNR			
3	DELETE TANK ACCESS DETAILS, ISSUED A.F.C.	8-7-73	LAM	KC			
4	REV SEC. 9/211 PER FAB'R DWGS, "ASBUILT" ISSUED AFC	3-27-75	LAM	KRC			

PRINT RECORD						
DATE	2-7-73	2-28-73	6-21-73	8-9-73	3-27-75	
FOR	FA	AFC	AFC	AFC	RAFC	
REVISED	0	1	2	3	4	
CUSTOMER	1-S	1-S	1-S	1-S	1-S	
FIELD	2	6	6	6	6	
INTRA CO.	2	2	2	2	2	
CAPITOL BYELL		1-S 1-S	1-S 1-S	1-S 1-S	—	

ENG. RECORD		
DRAWN	PJB	1-26-73
CHECKED	LNR	1-30-73
MECH. CK.	GJK	2-28-73
STRUCT. CK.	ETW	2-28-73
ELECT. CK.	GFG	7-2-73
PIPING CK.	MC	2-28-73
INSTR. CK.	NLK	7/28/73

DRAWING STATUS	
ISSUED	DATE
PRELIMINARY	
FOR COMMENTS AND/OR APPROVAL	2-13-73
APPROVED FOR CONSTRUCTION	
C. W. Stenson	2-28-73
REVISED & APPROVED FOR CONSTRUCTION 4	
for Ellen REV.	3-27-75

NOT APPROVED FOR CONSTRUCTION UNLESS SIGNED & DATED. DESTROY ALL PRINTS BEARING EARLIER DATE &/OR REVISION NO.

CONCENTRATOR BUILDING
STRUCTURAL STEEL
BALL MILL PLATFORM
SECTIONS & DETAILS SHT. #3

PHELPS DODGE CORPORATION
MORENCI BRANCH — MORENCI ARIZONA

SCALE: AS NOTED
Stearns-Roger CORPORATION
ORDER NO. B38100

DWG. NO. M. D. 15-4-211
SHEET NO.
REV. 4

072-4-4454